RC10 B6.3 TEAM KIT

Driver:	Roger Mills	Event:	Mid West Super Cup
Date:	23/05/2021	Track:	Kidderminster
Qualify:	8	TQ: ☐	Main: A
Finish:	6	Best Lap Time:	

Front Suspension:

Reset Forms

Ride Height:	18mm
Camber:	-1°
Toe:	0
Anti-Roll Bar:	None
Arm Type:	Kit gullwing
Tower Type:	Kit gullwing
Wheel Hex:	Kit
Steering Block:	+4mm trail
Caster Block Insert:	+5°
Bulkhead Type:	Kit plastic
Kick-Up Angle:	25°
Notes:	

Bump Steer Spacing: 1mm

Ball Stud Spacing: 1mm

Axle Height:

+3	☐
+2	☐
+1	☐
0	■

Steering Plate: Kit +1

Steering Stop Spacing: None

Ball Stud Spacing: 1mm

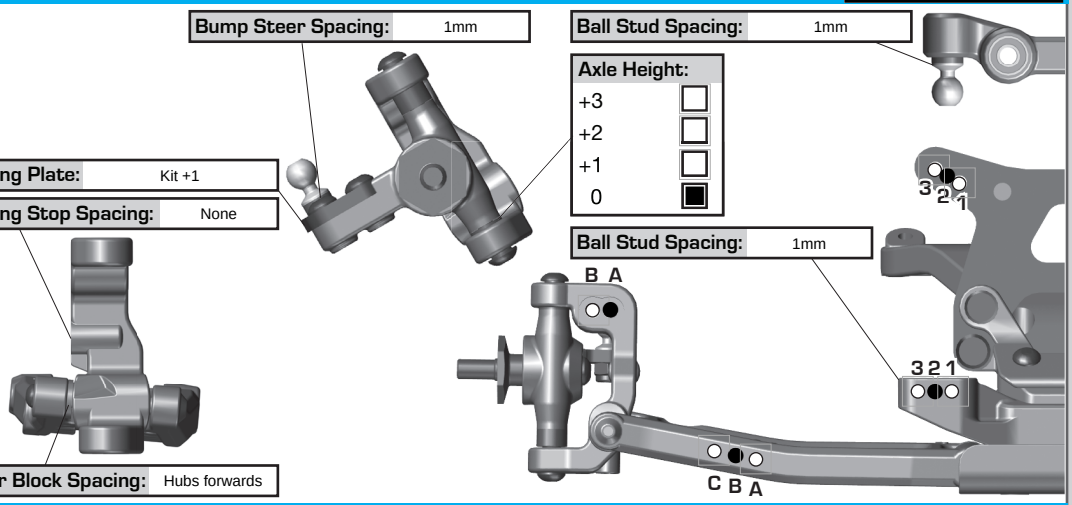

Caster Block Spacing: Hubs forwards

Rear Suspension:

Ride Height:	19mm
Camber:	-1°
Anti-Roll Bar:	None
Arm Type:	B6.1 plastic (2mm removed front inner face)
Tower Type:	Tall (91770)
Arm Spacing:	-2mm (more forwards)
Wheel Hex:	5mm
Shock Mounting Position:	Front of Arm ■ Rear of Arm ☐
Hub Spacing:	Fwd ■ Mid ☐ Back ☐
CVA Bone Length:	67mm
CVA Axle Type:	Kit
Notes:	B6.1 C & D blocks. Axle height -0.7mm (height insert trimmed down and shimmed up, pin hard against the hub)

C Mount: Aluminum ■ Brass ☐

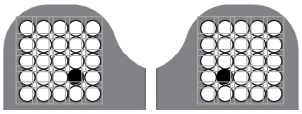

D Mount: Aluminum ■ Brass ☐

Axle Height:

▼0	3▲	+3
▼1	2▲	+2
▲1	2▼	+1
▲0	3▼	+0

Camber Link Spacing: 2mm

Ball Stud Spacing: 3mm

Ball Stud Spacing: 1mm

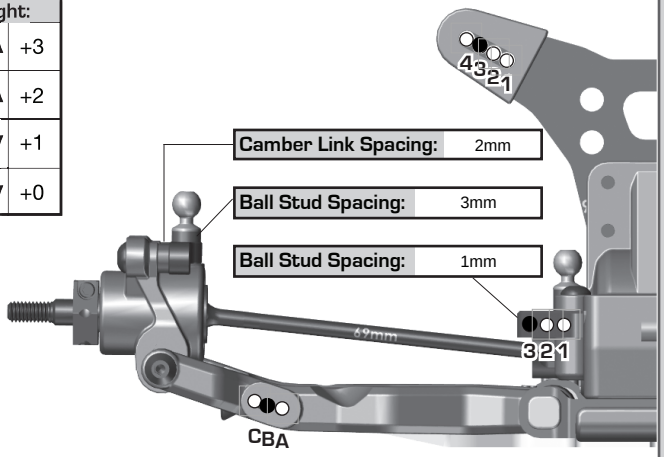

Electronics:

Radio:	Futaba 7XC	Servo:	ETRONIX 2061
EPA:	Throttle: 100 %	Brake:	100 %
ESC:	HobbyWing XR10pro		
ESC Settings:	brake 75%, 5% drag, Throttle rate 1, boost 0, turbo 15		
Motor:	HobbyWing V10 G3		
Wind:	8.0	Timing:	20°
Pinion:	24	Spur:	72
Battery:	CENTRO 3200mAh		
Battery Position:	F3 (middle, forward post)		
Battery Weight:	27g		

Drivetrain:

Transmission:

Laydown: ☐ Layback: ■

Differential: Ball Diff: ■

Height: +2 Gear Diff: ☐

Gear Diff Mass:

Notes:

Slipper Clutch:

Type:	kit
# of Pads:	2 white
Setting:	Nearly lifting nose

Shocks:

	Front	Rear
Piston:	2x1.6 THICK	2x1.8 THICK
Fluid:	32.5wt	27.5wt
Spring:	V1 Grey	V1 Green
Limiters:	Int: 0 Ext: 0	Int: 0 Ext: 0
Stroke:	22.5mm	28.5mm
Eyelet Length:	LONG (+2)	SHORT
Cup Offset:	5mm	5mm

Notes: 31mm long bodies (91482)
91494 machined shock seal spacers

Track Info:

Size:	Small ☐	Medium ■	Large ☐	Extra Large ☐
Surface:	Dirt ☐	Carpet ☐	Astroturf ■	Multi Surface ■
Traction:	Low ■	Medium ☐	High ☐	Very High ☐
Moisture:	Dry ☐	Damp ■	Wet ☐	
Condition:	Indoor ☐	Outdoor ■	Dusty ☐	Hard Packed ☐
	Bumpy ■	Grooved ☐	Smooth ☐	Loamy ☐
Temperature:	Ambient: 14°C	Track:		
Notes:				

Tires:

Front Tires:	Schumacher LP Cut Stagger Rib
Front Compound:	Silver
Front Insert:	None
Rear Tires:	Schumacher Mezzo
Rear Compound:	Silver
Rear Insert:	Schumacher TUBBY
Wheel (F/R):	AE
Notes:	

Body, Weight:

Body:	Penguin Cab Forward
Front Wing:	None
Rear Wing:	Penguin B6/B64 light
Wing Angle:	6°
Chassis Length:	SHORT (kit)
Servo Weights:	None
Electronic Weights:	Aluminium
Total Vehicle Weight:	1476g

Vehicle Comments: B6.1 C & D blocks in case you missed it above (91772 & 91688)